Designation: G 39 – 99

AMERICAN SOCIETY FOR TESTING AND MATERIALS
100 Barr Harbor Dr., West Conshohocken, PA 19428
Reprinted from the Annual Book of ASTM Standards. Copyright ASTM

Standard Practice for Preparation and Use of Bent-Beam Stress-Corrosion Test Specimens[1]

This standard is issued under the fixed designation G 39; the number immediately following the designation indicates the year of original adoption or, in the case of revision, the year of last revision. A number in parentheses indicates the year of last reapproval. A superscript epsilon (ϵ) indicates an editorial change since the last revision or reapproval.

1. Scope

1.1 This practice covers procedures for designing, preparing, and using bent-beam stress-corrosion specimens.

1.2 Different specimen configurations are given for use with different product forms, such as sheet or plate. This practice applicable to specimens of any metal that are stressed to levels less than the elastic limit of the material, and therefore, the applied stress can be accurately calculated or measured (see Note 1). Stress calculations by this practice are not applicable to plastically stressed specimens.

NOTE 1—It is the nature of these practices that only the applied stress can be calculated. Since stress-corrosion cracking is a function of the total stress, for critical applications and proper interpretation of results, the residual stress (before applying external stress) or the total elastic stress (after applying external stress) should be determined by appropriate nondestructive methods, such as X ray diffraction (**1**).[2]

1.3 Test procedures are given for stress-corrosion testing by exposure to gaseous and liquid environments.

1.4 The bent-beam test is best suited for flat product forms, such as sheet, strip, and plate. For plate material the bent-beam specimen is more difficult to use because more rugged specimen holders must be built to accommodate the specimens. A double-beam modification of a four-point loaded specimen to utilize heavier materials is described in 10.5.

1.5 The exposure of specimens in a corrosive environment is treated only briefly since other practices deal with this aspect, for example, Specification D 1141, and Practices G 30, G 36, G 44, G 50, and G 85. The experimenter is referred to ASTM Special Technical Publication 425 **(2).**

1.6 The bent-beam practice generally constitutes a constant strain (deflection) test. Once cracking has initiated, the state of stress at the tip of the crack as well as in uncracked areas has changed, and therefore, the known or calculated stress or strain values discussed in this practice apply *only* to the state of stress existing *before* initiation of cracks.

1.7 The values stated in SI units are to be regarded as standard. The inch-pound equivalents in parentheses are provided for information.

1.8 *This standard does not purport to address all of the safety concerns, if any, associated with its use. It is the responsibility of the user of this standard to establish appropriate safety and health practices and determine the applicability of regulatory limitations prior to use.* (For more specific safety hazard information see Section 7 and 12.1.)

2. Referenced Documents

2.1 *ASTM Standards:*

D 1141 Specification for Substitute Ocean Water[3]

G 30 Practice for Making and Using U-Bend Stress Corrosion Test Specimens[4]

G 36 Practice for Performing Stress-Corrosion Cracking Tests in a Boiling Magnesium Chloride Solution[4]

G 44 Practice for Evaluating Stress Corrosion Cracking Resistance of Metals and Alloys by Alternate Immersion in 3.5 % Sodium Chloride Solution[4]

G 50 Practice for Conducting Atmospheric Corrosion Tests on Metals[4]

G 85 Practice for Modified Salt Spray (Fog) Testing[4]

2.2 *NACE Documents:*[5]

NACE TM0177-96 Laboratory Testing of Metals for Resistance to Specific Forms of Environmental Cracking in H_2S Environments

3. Terminology

3.1 *Definitions of Terms Specific to This Standard:*

3.1.1 *stress-corrosion cracking*—a cracking process requiring the simultaneous action of a corrodent and sustained tensile stress. This excludes corrosion-reduced sections that fail by fast fracture. It also excludes intercrystalline or transcrystalline corrosion which can disintegrate an alloy without either applied or residual stress.

3.1.2 *cracking time*—the time elapsed from the inception of test until the appearance of cracking.

3.1.2.1 *Discussion*—1 The test begins when the stress is applied and the stressed specimen is exposed to the corrosive environment, whichever occurs later.

3.1.2.2 *Discussion*—2 The specimen is considered to have

[1] This practice is under the jurisdiction of ASTM Committee G-1 on Corrosion of Metals, and is the direct responsibility of Subcommittee G01.06 on Stress Corrosion Cracking and Corrosion Fatigue.

Current edition approved Jan. 10, 1999. Published April 1999. Originally published as G 39 – 73. Last previous edition G 39 – 90 (1994)$^{\epsilon 1}$.

[2] The boldface numbers in parentheses refer to the list of references appended to this practice.

[3] *Annual Book of ASTM Standards*, Vol 11.02.

[4] *Annual Book of ASTM Standards*, Vol 03.02.

[5] Available from National Association of Corrosion Engineers, Int., P. O. Box 218340, Houston, TX 77218–8340.

failed when cracks are detected. Presence of cracks can be determined with or without optical, mechanical, or electronic aids. However, for meaningful interpretation, comparisons should be made only among tests employing crack detection methods of equivalent sensitivity.

4. Summary of Practice

4.1 This practice involves the quantitative stressing of a beam specimen by application of a bending stress. The applied stress is determined from the size of the specimen and the bending deflection. The stressed specimens then are exposed to the test environment and the time required for cracks to develop is determined. This cracking time is used as a measure of the stress-corrosion resistance of the material in the test environment at the stress level utilized.

5. Significance and Use

5.1 The bent-beam specimen is designed for determining the stress-corrosion behavior of alloy sheets and plates in a variety of environments. The bent-beam specimens are designed for testing at stress levels below the elastic limit of the alloy. For testing in the plastic range U-bend specimens should be employed (see Practice G 30). Although it is possible to stress bent-beam specimens into the plastic range, the stress level cannot be calculated for plastically stressed three- and four-point loaded specimens as well as the double-beam specimens. Therefore, the use of bent-beam specimens in the plastic range is not recommended for general use.

6. Apparatus

6.1 *Specimen Holders*—Bent-beam specimens require a specimen holder for each specimen, designed to retain the applied stress on the specimen. Typical specimen holder configurations are shown schematically in Fig. 1.

NOTE 2—The double-beam specimen, more fully described in 10.5, is self-contained and does not require a holder.

NOTE 3—Specimen holders can be modified from the constant deformation type shown in Fig. 1 to give a constant-load type of stressing. For instance, the loading bolt can be supplanted by a spring or dead-weight arrangement to change the mode of loading.

6.1.1 The holder shall be made of a material that would withstand the influence of the environment without deterioration or change in shape.

NOTE 4—It should be recognized that many plastics tend to creep when subjected to sustained loads. If specimen holders or insulators are made of such materials, the applied stress on the specimen may change appreciably with time. By proper choice of holder and insulator materials, however, many plastics can be used, especially in short-time tests.

6.1.2 When the stress-corrosion test is conducted by immersion in an electrolyte, galvanic action between specimen and holder (or spacer) shall be prevented (see Note 5). This is accomplished by (*1*) making the holder of the same material as the individual specimens, (*2*) inserting electrically insulating materials between specimen and holder at all points of contact (see Note 4), (*3*) making the entire holder out of a nonmetallic material (see Note 4), or (*4*) coating the holder with an electrically nonconducting coating that effectively prevents contact between holder and electrolyte.

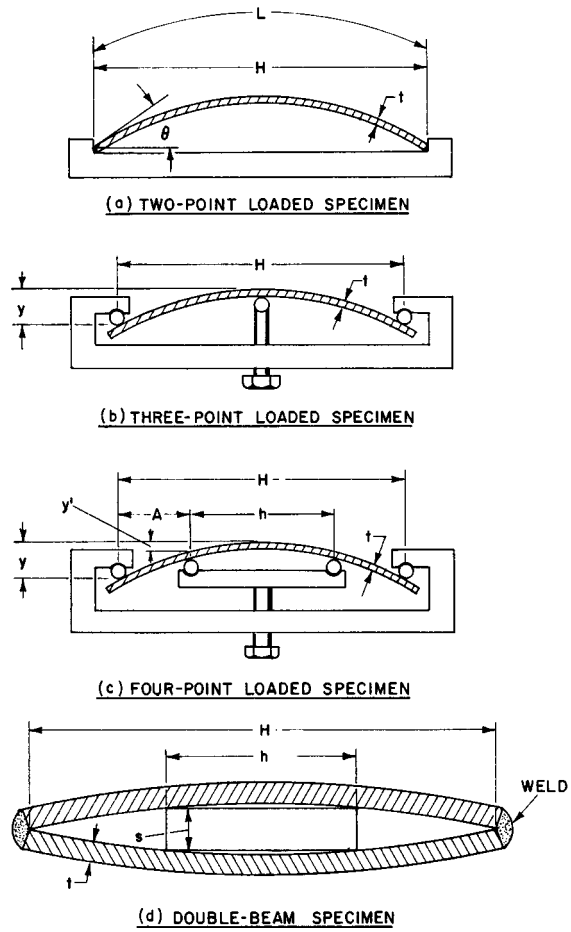

FIG. 1 Schematic Specimen and Holder Configurations

6.1.3 Crevice corrosion may occur in an electrolyte at contact points between specimen and holder (or spacer). In these instances the critical areas should be packed with a hydrophobic filler (such as grease or wax).

NOTE 5—In atmospheres (gas) galvanic action between specimen and holder either does not exist or is confined to a very small area as experienced in outdoor exposure tests.

6.2 *Stressing Jigs*—Three-point and four-point loaded specimen holders, Fig. 1 (*b* and *c*), contain a stressing feature in the form of a loading screw. To stress two-point loaded specimens (Fig. 1(*a*)), a separate stressing jig shall be used. A convenient stressing jig is shown in Fig. 2.

NOTE 6—The double-beam specimen, described in 10.5, requires a mechanical or hydraulic stressing frame (a universal tension testing machine can also be used) as well as welding equipment.

6.3 *Deflection Gages*—Deflection of specimens is determined by separate gages or by gages incorporated in a loading apparatus as shown in Fig. 3. In designing a deflection gage to suit individual circumstances care must be taken to reference the deflection to the proper support distance as defined in 10.2-10.5.

7. Hazards

7.1 Bent-beam specimens made from high-strength materials may exhibit high rates of crack propagation and a specimen

FIG. 2 Stressing Jig and Two-Point Loaded Specimen with Holder (approximately ¼ actual size)

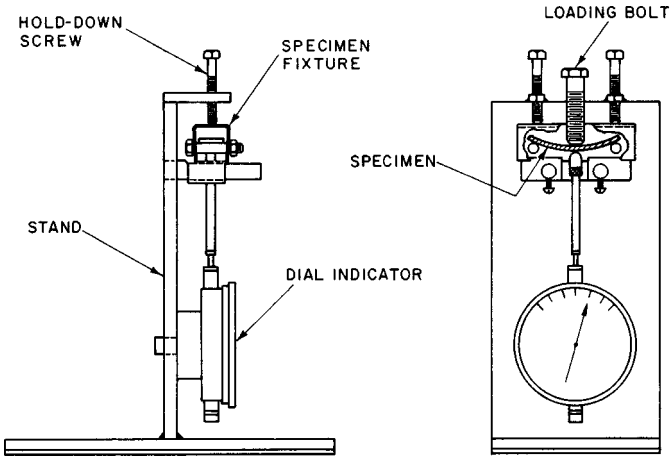

FIG. 3 Specimen Loading Apparatus for Three-Point Loaded Beam Specimens with Integral Deflection Gage

may splinter into several pieces. Due to high stresses in a specimen, these pieces may leave the specimen at high velocity and can be dangerous. Personnel installing and examining specimens should be cognizant of this possibility and be protected against injury.

8. Sampling

8.1 Test specimens shall be selected so that they represent the material to be tested. In simulating a service condition, the direction of load application in the specimen shall represent the anticipated loading direction in service with respect to processing conditions, for example, rolling direction.

8.2 Paragraphs 7.4 and 7.5 deal specifically with specimen selection as related to the original material surface.

9. Test Specimen

9.1 The bent-beam stress-corrosion specimens shall be flat strips of metal of uniform, rectangular cross section, and uniform thickness.

9.2 The identification of individual specimens should be permanently inscribed at each end of the specimen because this is the area of lowest stress and cracking is not expected to be initiated by the identification markings. If stenciling is used for identification, this shall be done only on softened material before any hardening heat treatments to prevent cracking in the stenciled area. Care must be taken to prevent the identification from being obliterated by corrosion.

9.3 Mechanical properties should be determined on the same heat-treatment lot from which stress-corrosion specimens are obtained.

9.4 The specimens can be cut from sheet or plate in such a fashion that the original material surface is retained. This procedure is recommended when it is desired to include the effect of surface condition in the test.

9.5 If, however, it is desired that surface conditions should not influence the test results of several materials with different surface conditions, the surfaces of all specimens must be prepared in the same way. It is recommended that grinding or machining to a surface finish of at least 0.7 µm (30 µin.) and to a depth of at least 0.25 mm (0.01 in.) be utilized for surface preparation. It is desirable to remove the required amount of metal in several steps by alternately grinding opposite surfaces. This practice minimizes warpage due to residual stresses caused by machining. All edges should be similarly ground or machined to remove cold-worked material from previous shearing. Chemical or electrochemical treatments that produce hydrogen on the specimen surface must not be used on materials that may be subject to embrittlement by hydrogen or that react with hydrogen to form a hydride.

9.6 Immediately before stressing, the specimens should be degreased and cleaned to remove contamination that occurred during specimen preparation. Only chemicals appropriate for the given metal or alloy should be used. Care must be exercised not to contaminate cleaned specimens. Also, it is suggested that specimens be examined for cracks before exposure to the test environment.

10. Stress Calculations

10.1 The equations given in this section are valid only for stresses below the elastic limit of the material. At stresses above the elastic limit but below the engineering yield strength (0.2 % offset) only a small error results from use of the equations (see Note 1). The equations must not be used above the yield strength of the material. The following paragraphs give relationships used to calculate the maximum longitudinal stress in the outer fibers of the specimen convex surface. Calculations for transverse stress or edge-to-edge variation of longitudinal stress are not given; the specimen dimensions are chosen to minimize these stresses consistent with convenient use of the specimens. The specimen dimensions given here can be modified to suit specific needs. However, if this is done the approximate specimen proportions should be preserved to give a similar stress distribution (for instance, if the length is doubled the width should be doubled also).

10.1.1 When specimens are tested at elevated temperatures, the possibility of stress relaxation should be investigated. Relaxation can be estimated from known creep data for the specimen, holder, and insulating materials. Differences in

thermal expansion also should be considered.

10.1.2 The applied stress is determined by specimen dimensions and the amount of bending deflection. Thus, the errors in the applied stress are related to those inherent in the use of measuring instruments (micrometers, deflection gages, strain gages, and so forth). For the two-point loaded specimens, most measured values lie within 5 % of the values calculated in accordance with the procedures given in 10.2.1-10.2.3, as reported by Haaijer and Loginow **(4)**. The calculated stress applies only to the state of stress before initiation of cracks. Once cracking is initiated, the stress at the tip of the crack, as well as in uncracked areas, has changed.

10.2 *Two-Point Loaded Specimens*—This specimen can be used for materials that do not deform plastically when bent to $(L - H)/H = 0.01$ (see section 10.2.5). The specimens shall be approximately 25 by 254-mm (1 by 10-in.) flat strips cut to appropriate lengths to produce the desired stress after bending as shown in Fig. 1(*a*).

10.2.1 Calculate the elastic stress in the outer fiber at midlength of the two-point loaded specimens from relationships derived from a theoretically exact large-deflection analysis **(4)**, as follows:

$$\epsilon = 4(2E - K)\left[\frac{k}{2} - \frac{2E - K}{12}\left(\frac{t}{H}\right)\right]\frac{t}{H} \tag{1}$$

and

$$(L - H)/H = [K/2E - K)] - 1 \tag{2}$$

where:
L = length of specimen,
H = distance between supports (holder span),
t = thickness of specimen,
ϵ = maximum tensile strain,
K = $\int_0^{\pi/2} (1 - k^2 \sin^2 z)^{-1/2}\, dz$ (complete elliptic integral of the first kind),
E = $\int_0^{\pi/2} (1 - k^2 \sin^2 z)^{1/2}\, dz$ (complete elliptic integral of the second kind),
k = $\sin \theta/2$,
θ = maximum slope of the specimen, that is, at the end of the specimen, and
z = integration parameter **(4)**.

10.2.2 The mathematical analysis establishes that Eq 1 and Eq 2 define the relationship between the strain ϵ and $(L - H)/H$ in parameter form. The common parameter in these equations is the modulus k of the elliptic integrals. Thus, the following procedure can be used to determine the specimen length L that is required to produce a given maximum stress σ:

10.2.2.1 Divide the stress σ by the modulus of elasticity E_m to determine the strain ϵ.

$$\epsilon = \sigma/E_m$$

10.2.2.2 From Eq 1 determine the value of k corresponding to the required value of ϵ.

10.2.2.3 By using appropriate values of k evaluate Eq 2 for L. To facilitate calculations a computer can be used to generate a table for a range of strain ϵ and H/t with resultant values of $(L - H)/H$.

10.2.3 Calculate the deflection of the specimen as follows:

$$y/H = k/(2E - K) \tag{3}$$

where:
y = maximum deflection.

The other quantities are given in 10.2.1.

This relationship can be used as a simple check to ensure that the maximum stress does not exceed the proportional limit. If it should exceed the proportional limit, the measured deflection will be greater than that calculated from Eq 3.

10.2.4 As an alternative method the following approximate relationship can be used for calculating specimen length:

$$L = (ktE/\sigma)\sin^{-1}(H\sigma/ktE) \tag{4}$$

where:
L = specimen length,
σ = maximum stress,
E = modulus of elasticity,
H = holder span,
t = thickness of specimen, and
k = 1.280, an empirical constant.

This equation can be solved by computer, by trial and error, or by using a series expansion of the sine function. Eq 4 shall be used only when the quantity $(H\sigma/ktE)$ is less than 1.0.

10.2.5 Choose specimen thickness and length and holder span to obtain a value for $(L - H)/H$ of between 0.01 and 0.50, thus keeping the error of stress within acceptable limits. A specimen thickness of about 0.8 to 1.8 mm (0.03 to 0.07 in.) and a holder span of 177.8 to 215.9 mm (7.00 to 8.50 in.) has been very convenient when working with very high strength steels and aluminum alloys with applied stresses ranging from about 205 MPa (30 ksi) for aluminum to 1380 MPa (200 ksi) for steel. The specimen dimensions given here can be modified to suit specific needs. However, if this is done, approximate dimensional proportions shall be preserved.

10.2.6 In two-point loaded specimens the maximum stress occurs at midlength of the specimen and decreases to zero at specimen ends.

10.2.7 The two-point loaded specimen is preferred to three-point loaded specimens because in many instances crevice corrosion of the specimen occurs at the central support of the three-point loaded specimen. Since this corrosion site is very close to the point of highest tension stress, it may cathodically protect the specimen and prevent possible crack formation or cause hydrogen embrittlement. Furthermore, the pressure of the central support at the point of highest load introduces biaxial stresses at the area of contact and could introduce tension stresses where normally compression stresses are present.

NOTE 7—Occasionally two-point loaded specimens having a nonuniform cross section are used for special purposes. A description of such a specimen is given by Wilson and Spier **(5)**.

10.3 *Three-Point Loaded Specimens*—The specimen shall be a flat strip typically 25 to 51-mm (1 to 2-in.) wide and 127 to 254-mm (5 to 10-in.) long. The thickness of the specimen is usually dictated by the mechanical properties of the material and the product form available. Support the specimen at the ends and bend the specimen by forcing a screw (equipped with a ball or knife-edge tip) against it at the point halfway between the end supports in a fashion shown in Fig. 1(*b*). The specimen dimensions given here can be modified to suit specific needs.

However, if this is done, approximate dimensional proportions shall be preserved.

10.3.1 Calculate the elastic stress at midspan in the outer fibers of three-point loaded specimens from the relationship:

$$\sigma = 6Ety/H^2 \quad (5)$$

where:
σ = maximum tensile stress,
E = modulus of elasticity,
t = thickness of specimen,
y = maximum deflection, and
H = distance between outer supports.

10.3.2 The above relationship is based on small deflections (y/H less than 0.1). In sheet gage bent-beam specimens the deflections are usually large, and thus, the relationship is only approximate. To obtain more accurate stress values, use for calibration a prototype specimen equipped with strain gages. This prototype should have the same dimensions as the test specimens and should be stressed in the same way.

10.3.3 In three-point loaded specimens the maximum stress occurs at midlength of the specimen and decreases linearly to zero at the outer supports.

10.3.4 For limitation in the use of three-point loaded specimens see 10.2.7.

10.4 *Four-Point Loaded Specimens*—The specimen shall be a flat strip typically 25 to 51-mm (1 to 2-in.) wide and 127 to 254-mm (5 to 10-in.) long. The thickness of the specimen is usually dictated by the mechanical properties of the material and the product form available. Support the specimen at the ends and bend the specimen by forcing two inner supports against it in a fashion shown in Fig. 1(*c*). The two inner supports shall be located symmetrically around the midpoint between the outer supports. The specimen dimensions given here can be modified to suit specific needs. However, if this is done, approximate dimensional proportions shall be preserved.

10.4.1 Calculate the elastic stress for the midportion of the specimen (between contact points of the inner support) in the outer fibers of four-point loaded specimens from the following relationship:

$$\sigma = 12Ety/(3H^2 - 4A^2) \quad (6)$$

where:
σ = maximum tensile stress,
E = modulus of elasticity,
t = thickness of specimen,
y = maximum deflection (between outer supports),
H = distance between outer supports, and
A = distance between inner and outer supports.

The dimensions are often chosen so that $A = H/4$.

10.4.2 An alternative method of calculating the elastic stress between the inner supports is as follows:

$$\sigma = 4Ety'/h^2 \quad (7)$$

where:
h = distance between inner supports, and
y' = deflection between inner supports.

(This equation is a special case of 10.4.1 when $A = 0$.)

10.4.3 The above relationships are based on small deflections (y/H less than 0.1). In sheet-gage bent-beam specimens the deflections are usually large, and thus, the relationships are only approximate. To obtain more accurate stress values, use for calibration a prototype specimen equipped with strain gages. This prototype specimen should have the same dimensions as the test specimens and should be stressed in the same way.

10.4.4 In four-point loaded specimens the maximum stress occurs between the contact points with the inner supports; in this area the stress is constant. From the inner supports the stress decreases linearly toward zero at the outer supports.

10.5 *Double-Beam Specimen*—The specimen shall consist of two flat strips 25 to 51-mm (1 to 2-in.) wide and 127 to 254-mm (5 to 10-in.) long. Bend the strips against each other over a centrally located spacer until both ends of the specimens touch. Hold them in this position by welding the ends together as shown in Fig. 1(*d*) (see Note 8). An equivalent procedure for bolted specimens is described on pp. 319–321 of Ref **(2)**.

NOTE 8—If the test is to be conducted in an electrolyte, the spacer shall be made of the same material as the specimen (or of an electrically nonconducting material such as glass, ceramic, and so forth) to prevent galvanic action between specimen and spacer. See also 6.1.2 and Note 4 and Note 5.

10.5.1 Calculate the elastic stress for the midportion of the specimen (between contact points of the spacer) in the outer fibers of the doublebeam specimens from the following relationship:

$$\sigma = \frac{3Ets}{H^2[1 - (h/H)][1 + (2h/H)]} \quad (8)$$

where:
σ = maximum tensile stress,
E = modulus of elasticity,
t = thickness of specimen strip,
s = thickness of spacer,
H = see Fig. 1(*d*), and
h = length of spacer.

10.5.2 When the length of the spacer h is chosen so that $H = 2h$ the equation in 10.5.1 is simplified to:

$$\sigma = 3Ets/H^2$$

10.5.3 The above relationships are based on small deflections (s/H being less than 0.2). In sheet-gage bent-beam specimens the deflections are usually large, and thus, the relationships are only approximate. To obtain more accurate stress values, use for calibration a prototype specimen equipped with strain gages. The prototype specimen should have the same dimensions as the test specimens and should be stressed in the same way.

10.5.4 In double-beam specimens the maximum stress occurs between the contact points with the spacer; in this area the stress is constant. From the contact with the spacer the stress decreases linearly toward zero at the ends of specimens.

11. Choice of Test Conditions

11.1 The purpose of stress-corrosion testing is to simulate on a small scale the conditions (materials, stress, and environment) that exist in an engineering application. The stresses in an engineering structure can be varied: operational (design)

stresses and residual stresses (from heat treatment or fabrication). Residual stresses are frequently the more important, primarily because current design practices and close control of processes have kept operational stresses well below the yield strength of the metal in use. On the other hand, magnitude and direction of residual stresses frequently are difficult to predict and also difficult to measure. Depending on the degree of restraint, residual stresses may even exceed the initial yield strength of the material.

11.2 Generally stress-corrosion testing falls into two broad categories: (*1*) evaluation of materials for a specific application and (*2*) comparison of the relative behavior of several materials or environments.

11.2.1 To evaluate materials for specific applications the testing conditions should be representative of the most severe conditions to which the materials would be subjected in service. Testing at nominal or design conditions could be misleading. An engineering structure, because of residual stresses, is expected to be stressed to its yield strength at some points even if the design stress for that structure is appreciably below yield strength. Thus, the use of the elastically stressed bent-beam specimens for materials evaluation is of limited value.

11.2.2 To compare materials or environments for relative stress-corrosion behavior, the test conditions may be only severe enough to produce varying degrees of cracking in the alloys of interest, in mechanical or thermal treatments used, or in sensitivity to specific environments investigated. By testing a set of specimens at a series of stress levels, the stress dependence of alloys can be assessed. The bent-beam specimen is very well suited for establishing the relative merits of several alloys for the relative severity of several environments.

11.3 Ideally, the environmental test conditions should be the same that would prevail in the intended use of the alloys. In choosing a set of test conditions, it is important that they (environment and stress) be well defined and reproducible. A detailed discussion is given by Loginow **(6)**.

11.4 The presence of a machined notch in the middle of the tension side of a bent beam will induce a severe triaxial stress state at the root of the notch. The actual bending stress there will be greater by a concentration factor dependent on the notch geometry, than the minimal test stress, and generally, may be expected to be in the range of plastic stain. Advantages of such a notched specimen include the probable localized cracking in the notch and an acceleration of failure. However, unless directly related to practical conditions of usage, misleading failures may ensue.

11.4.1 Another type of stress concentration at the site of two drilled holes located half way between the end supports of a three-point loaded bent beam has been used in the evaluation of metals for oilfield equipment. Details on the preparation and use of this specimen are described in NACE TM0177-96. Laboratory test data for carbon and low-alloy steels have been found to correlate with field data **(7)**.

12. Specimen Exposure

12.1 Expose the stressed specimens to the environment (gaseous or liquid) of interest. This can be accomplished by mounting the specimen holders on appropriate racks and exposing the entire rack to the environment. A typical atmospheric exposure rack is shown in Fig. 4. As noted in 7.1, bent-beam specimens may break violently and thus cause injury. To protect personnel and to prevent specimen loss, drill holes in specimen ends and holders and secure the specimens by wires to their holders.

12.2 Determination of cracking time is a subjective procedure involving visual examination that under some conditions can be very difficult, as noted in Section 13, and depends on the skill and experience of the inspector.

12.3 *Laboratory Exposure of Bent Beams*— In both alternate and sustained immersion of bent beams, avoid galvanic corrosion between fixtures and specimens as discussed in 6.1.2 and Note 4 and Note 5. It should be recognized that, at points of contact between specimen and fixture, crevice corrosion may occur on some materials, which in turn may result in galvanic protection of the stressed area. If this condition occurs, either eliminate the crevice or consider a different kind of specimen. In alternate immersion, expose the specimen to allow complete drainage and drying of the surface. In immersion tests, arrange the specimens so as to prevent contact with

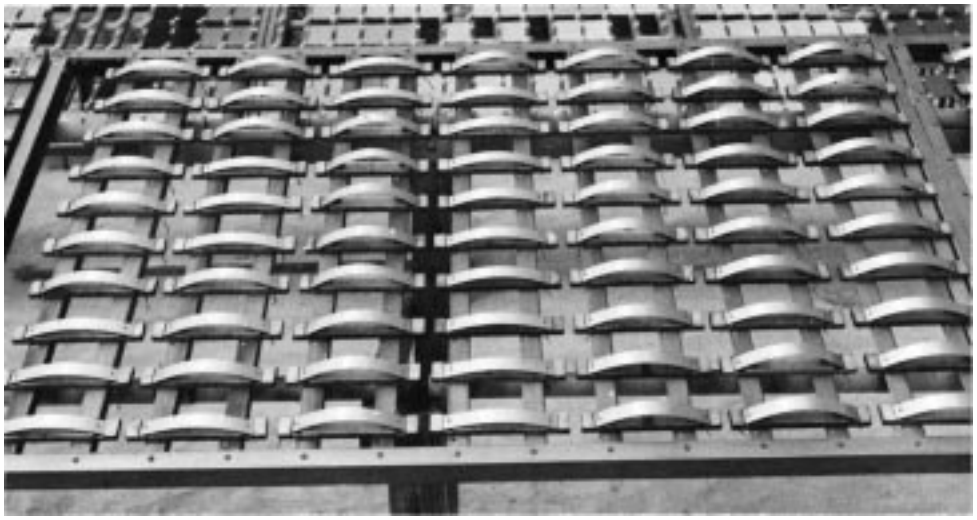

FIG. 4 Bent-Beam Specimens on Atmospheric Exposure Rack

each other. In both sustained and alternate immersion, the solution volume should be large enough to prevent depletion of corrosive agents. In elevated-temperature tests, make arrangements to reflux the solution to maintain a constant concentration.

12.4 *Atmospheric Exposure of Bent Beams*— Expose the specimens in an area that is representative of the atmospheric conditions of interest.

13. Inspection of Specimens

13.1 As continuous observation of specimens is usually impractical, inspect specimens for appearance of cracks at predetermined time intervals. These intervals are usually increased as the test progresses because the logarithms of observed cracking times are often normally distributed as described by Loginow **(6)** and by Booth et al **(8)**.

13.2 Determine presence of cracks by visual observation, usually with the aid of a 5 to 10 power magnifying glass. If the specimen contains only one or a few cracks, the shape of the bend can be considerably changed, predominantly by kinking; this feature helps in identifying cracked specimens. However, if many cracks are present, a change in shape may not be apparent. It should also be noted that presence of voluminous corrosion products may obscure cracks, thus making a careful examination mandatory. In these instances metallographic sectioning of the specimen may be necessary to detect cracks.

14. Report

14.1 Results of stress-corrosion tests with bent-beam specimens are expressed as the time to produce failure by cracking or as the fraction of specimens that have cracked in a fixed time. In addition to the cracking time the following data shall be reported:

14.1.1 Specimen identification,

14.1.2 Material name or specification code,

14.1.3 Chemical composition,

14.1.4 Heat treatment,

14.1.5 Mechanical properties,

14.1.6 Type and orientation of specimen used and surface condition (hot rolled, cold rolled, machined, surface ground, and so forth),

14.1.7 Applied stress (and residual stress, if known),

14.1.8 Details of specimen preparation if different from those specified here (or if not specified),

14.1.9 Detailed description of test environment, and

14.1.10 Remarks concerning the size and appearance of cracks may be included.

15. Keywords

15.1 bent-beam; constant deformation; constant load; elastic strain; quantitative stress; stress-corrosion cracking; stress-corrosion test specimen

REFERENCES

(**1**) *Measurement for Stress by X-Ray*, SAE Information Report TR-182, Society of Automotive Engineers, New York, NY.

(**2**) *Symposium on Stress-Corrosion Testing, ASTM STP 425*, ASTM, 1967.

(**3**) Snape, E., "Roles of Composition and Microstructure in Sulfide Cracking of Steel," *Corrosion*, Vol 24, 1968, pp. 261–282.

(**4**) Haaijer, G., and Loginow, A. W., "Stress Analysis of Bent-Beam Stress-Corrosion Specimen," *Corrosion*, Vol 21, 1965, pp. 105–112.

(**5**) Wilson, P. E., and Spier, E. E., "Nonlinear Bending of a Stress-Corrosion Specimen," *Journal of Engineering for Industry*, Vol 88, 1966, pp. 31–36.

(**6**) Loginow, A. W., "Stress-Corrosion Testing of Alloys," *Materials Protection*, Vol 5, No. 5, May 1966, pp. 33–39.

(**7**) Fraser, J. P., Eldredge, G. G., and Treseder, R. S., "Laboratory and Field Methods for Quantitative Study of Sulfide Corrosion Cracking," $H_2$5 Corrosion in Oil and Gas Production—A Compilation of Classic Papers, Tuttle, R. N. and Kane, R. D., eds. (Houston, TX: NACE, 1981) p. 283. Original publication: Corrosion 14, 11 (1958) p. 517t.

(**8**) Booth, F. F., Tucker, G. E. G., and Goddard, H. P., "Statistical Distribution of Stress-Corrosion Endurance," *Corrosion*, Vol 19, 1963, pp. 390t–395t.

The American Society for Testing and Materials takes no position respecting the validity of any patent rights asserted in connection with any item mentioned in this standard. Users of this standard are expressly advised that determination of the validity of any such patent rights, and the risk of infringement of such rights, are entirely their own responsibility.

This standard is subject to revision at any time by the responsible technical committee and must be reviewed every five years and if not revised, either reapproved or withdrawn. Your comments are invited either for revision of this standard or for additional standards and should be addressed to ASTM Headquarters. Your comments will receive careful consideration at a meeting of the responsible technical committee, which you may attend. If you feel that your comments have not received a fair hearing you should make your views known to the ASTM Committee on Standards, 100 Barr Harbor Drive, West Conshohocken, PA 19428.